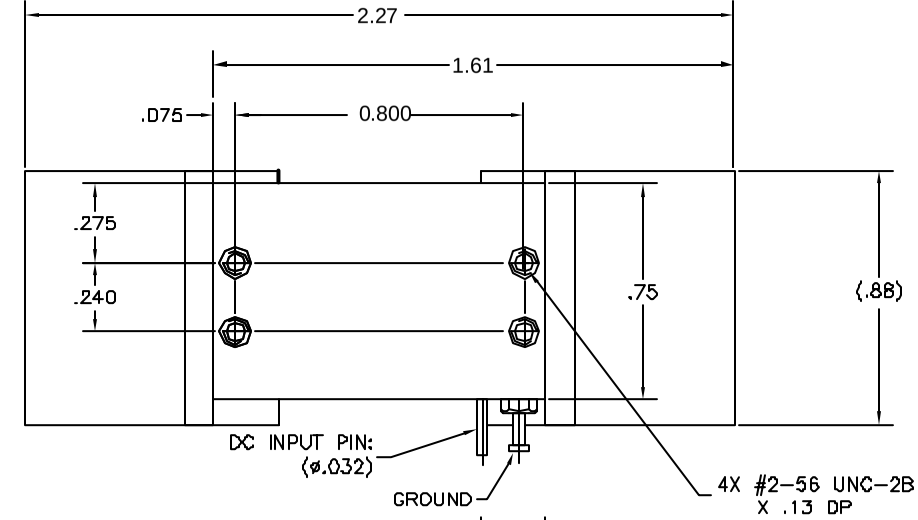

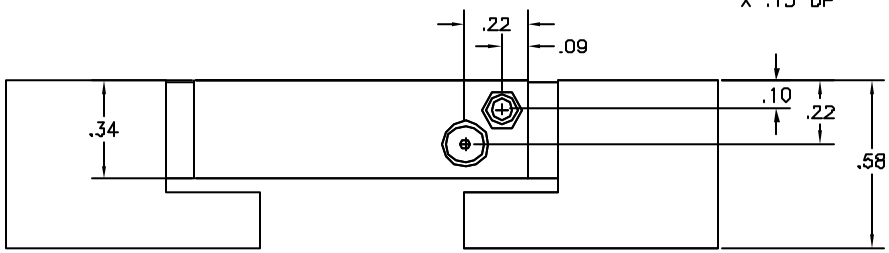

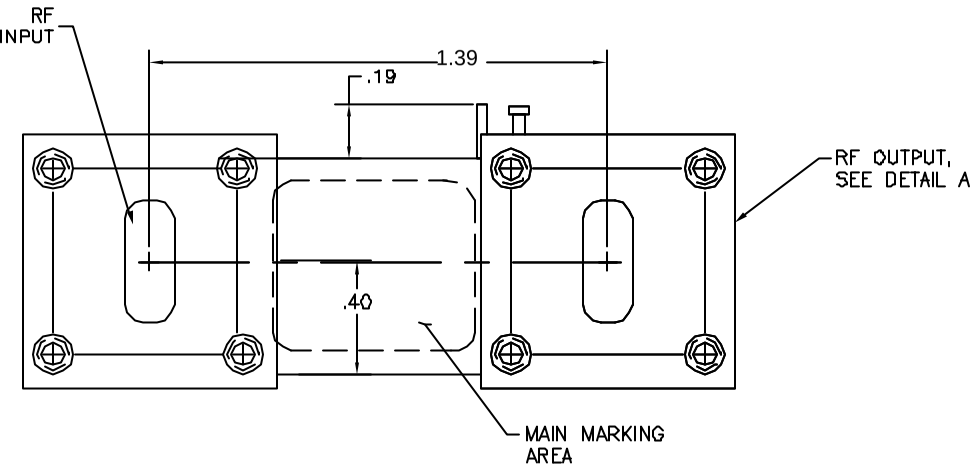

NORDEN
MILLIMETER

4204A42S

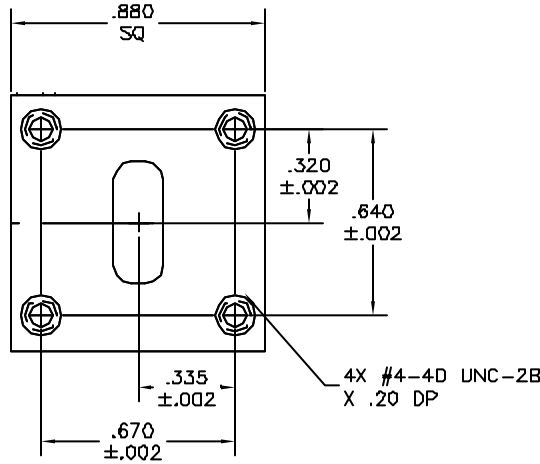

DETAIL A
WR-42 WAVEGUIDE