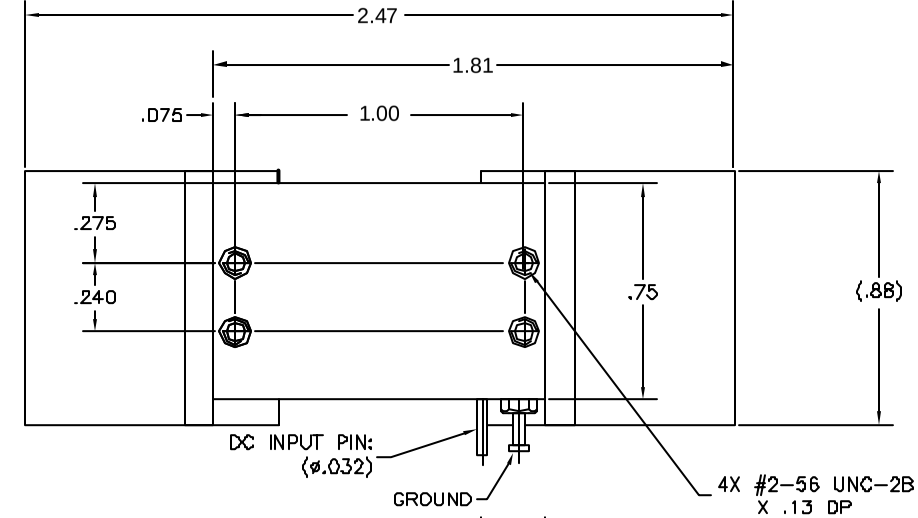

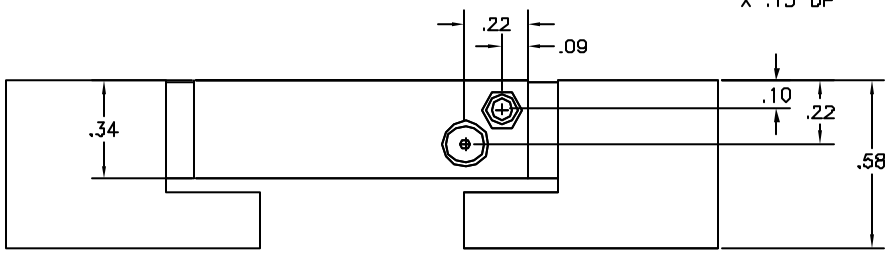

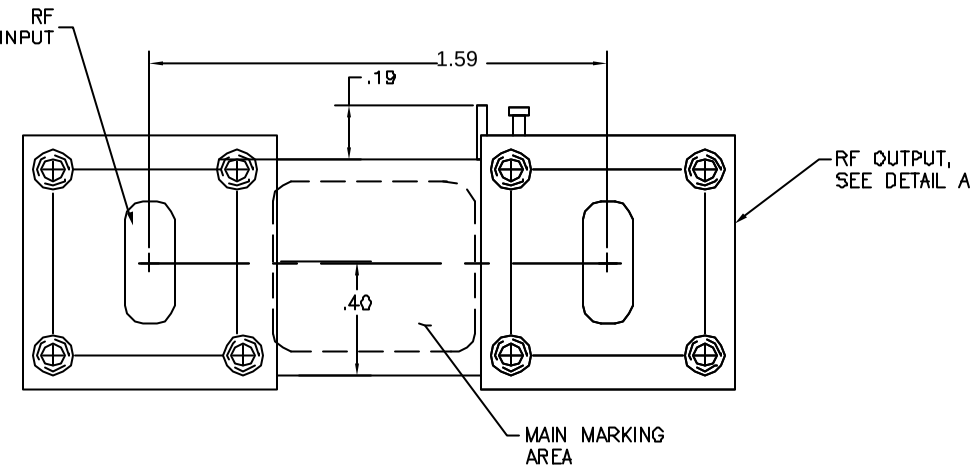

NORDEN
MILLIMETER

4205A42S

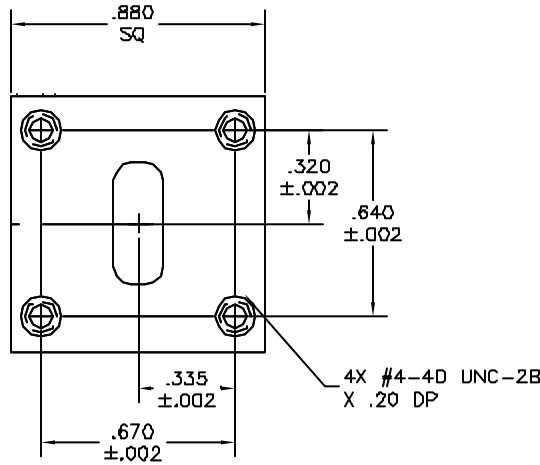

DETAIL A
WR-42 WAVEGUIDE